DINGO® COMPACT UTILITY LOADERS

WHEELED / TRACKED / VERTICAL LIFT / RADIAL LIFT

SAVE LABOR, DO MORE AND FINISH FASTER.

Think of all the tasks you do every day. Now imagine how much faster you could do them with a Toro® Dingo®. The versatile Dingo is an efficient alternative to hand labor, skid-steer loaders and compact track loaders — especially in tight spots other equipment can't reach. And the light footprint is gentle on turf. It's a simple way to boost productivity and expand your business — and now our full lineup offers more choices than ever. Whether you need wheels or tracks, gas or diesel, or radial lift or vertical lift capabilities, there's a Dingo that's right for you.

35+ ATTACHMENTS

HANDLE VIRTUALLY ANY TASK

The Dingo works with a wide range of available attachments. You can do anything from augering, earthmoving, tilling and trenching to leveling, lifting, hauling and demolishing with one machine. Plus, with our full lineup, you can choose from gasoline or diesel models with tracks or wheels to fit the jobs you need to do.

DINGO SELECTION GUIDE

WHEELED MODELS

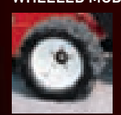

	Gas	Diesel	Ride-On	Radial Lift
Dingo 220	X		X	X
Dingo 323	X		X	X
Dingo 320D		X	X	X

TRACKED MODELS
Available in both wide and narrow track

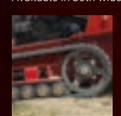

	Gas	Diesel	Ride-On	Radial Lift	Vertical Lift
Dingo TX 427	X		*	X	
Dingo TX 525		X	*	X	
Dingo TX 1000		X	X		X

*Ride-on platform available as optional part

REACH HIGHER AND LIFT MORE

THE COMPACT UTILITY LOADER, REDEFINED.

The all-new TX 1000 - a giant step forward in performance and versatility. This lightweight maneuverable machine packs unmatched strength and reach in a compact package for the ultimate working advantage. The 1,000 pound rated operating capacity makes the TX 1000 a powerful, compact alternative to larger skid steer loaders and other machines.

TX 1000 CONTROLS

New patent-pending control system exclusive to the Toro TX 1000 provides intuitive operation that's effortless for the operator, all day long.

1. Curl, dump or float the bucket while raising or lowering the loader arms with one hand using the joystick.
2. Grab the traction drive joystick for effortless, single-hand control.
3. Activate the auxiliary circuit control lever to power the attachments instantly.

TX 1000 FEATURES

UNMATCHED STRENGTH
Vertical lift loader arms allow the TX 1000 to lift and transport heavy loads with a category-leading rated operating capacity of 1,000 lbs.

MAXIMUM HEIGHT AND REACH
The 81" (206 cm) hinge pin height allows attachments to easily clear the side of 30-yard dumpsters or one-ton trucks.

HIGH DRIVE TRACK SYSTEM
Ideal for the demands of any jobsite to outperform on any surface, even sand or loose gravel.

COMPACT FOOTPRINT
The narrow model is just 33.7" (86 cm) wide and fits through standard 36" gates. At just 41" (104 cm) wide, the wide-track model is also easy to maneuver.

TX 427 & TX 525 TRACKED DINGO

MORE WORK IN
LESS TIME

RUGGED AND DEPENDABLE.

The original tracked compact utility loaders, Toro Dingo TX 427 & 525 models deliver durability and reliability pros and Do-It-Yourselvers trust, combined with powerful performance and incredible versatility. For operators who are frequently switching tasks or moving things out of the way, these walk-behind models provide greater productivity due to the ability to walk up to the machine and go. In addition, with walk-behind Dingos, operators don't feel the bumps when going over rough terrain.

EXCLUSIVE TX CONTROLS
Three simple controls let operators get to work fast:

1. Curl, dump or float the bucket while raising or lowering the loader arms with one hand using the joystick.
2. Grab the one-handed traction drive from any angle for effortless control.
3. Activate the auxiliary circuit control lever to power the attachments instantly.

TX 427 & TX 525 FEATURES

LOW-IMPACT FOOTPRINT
Long-lasting, Kevlar® reinforced tracks disperse weight evenly for a light footprint on turf, while delivering better traction in sandy or wet ground conditions.

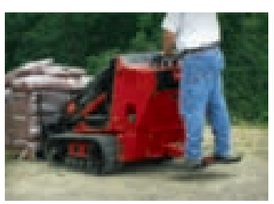

EASY-TO-USE PLATFORM
Quickly and easily bolted on to Toro Dingo TX 427 & 525 models, this ride-on platform helps minimize operator fatigue when the job requires a lot of hauling or covers substantial distances. The platform can be flipped up – out of the way – any time the operator wishes.

HIGH-PERFORMANCE HYDRAULICS
The 4-pump hydraulic system directs power right where you need it. Operate the loader, bucket, traction and auxiliary drives at the same time for increased operator efficiency.

DIESEL AND GAS ENGINES
Choose a gas model for easy maintenance and cold-weather starting. Or choose diesel for better performance in high altitudes and warmer climates, along with more horsepower for attachments.

220, 323 & 320D WHEELED DINGOS

BIG BENEFITS IN SMALL SPACES

GO WHERE YOU NEED TO WORK.

Access confined spaces you never thought possible with a wheeled Dingo® compact utility loader. These models offer zero-turn capability, along with a shorter length that's easy to load on a trailer. You also get reliable hydraulic power to use a wide range of attachments. If you do a lot of tasks in tight spaces or on hard surfaces, these are the models for you.

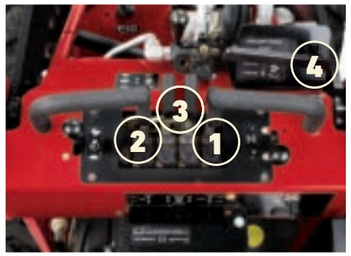

DINGO CONTROLS
Responsive controls make the wheeled Dingo highly maneuverable:

1. Curl or dump the attachment while raising or lowering the loader arms.
2. Raise and lower loader arms.
3. Traction drive control.
4. Activate the auxiliary circuit control lever to power the attachments instantly.

220, 323 & 320D FEATURES

HIGHLY MANEUVERABLE
Short wheelbase design offers excellent maneuverability. Get into tight spaces where only hand labor could go before.

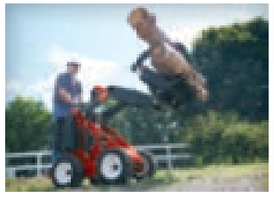

TWO TRANSPORT SPEEDS
Low speed sends more hydraulic power to the attachment and high speed sends more power to the wheels. The low speed option also helps new operators shorten their learning curve.

IMPROVED VISIBILITY
The integrated ride-on operator platform allows improved visibility of the working area and attachments.

4-PAW™ INDEPENDENT FOUR-WHEEL DRIVE
Four independent wheel motors deliver hydraulic flow and pressure to all four wheels for improved traction and mobility. Fewer moving parts also mean less maintenance.
Available on 323 and 320D only.

GET THE JOB DONE

TORO QUICK ATTACH SYSTEM
CHANGE ATTACHMENTS IN SECONDS

1 Mount to the attachment plate on the unit.

2 Twist the pins to locked position.

3 For powered attachment, connect hydraulic lines to dripless flush-face quick couplers on loader arms.

TRENCHING, PLOWING, AND BORING EQUIPMENT

BORE DRIVE HEAD AND ROD & REAMER KIT *(sold separately)*
Easily bore under driveways and sidewalks to simplify irrigation and cable installations.

VIBRATORY PLOW
Reduce time spent on irrigation or cable installations. The vibratory plow optimizes pipe-pulling performance while minimizing turf damage. Extremely tight turning radius allows for tight maneuvering in confined spaces.

TRENCH FILLER
Two sets of opposing augers direct spoils into the hole. Standard float mechanism allows for up to 5" of ground following floatation. Skids evenly disperses weight and slide easily over turf, minimizing damage.

TORO® DINGO® COMPACT UTILITY LOADER ACCESSORIES

SUPERIOR DESIGN FOR LONG-LASTING, DEPENDABLE PERFORMANCE AND THE PERFECT FIT.

Genuine Toro Dingo attachments are your best assurance for attaining a long life and peak performance from your CUL. Designed specifically for the Dingo, the attachments are easy to operate and deliver clear sight lines.

TRENCHING, PLOWING AND BORING SPECIFICATIONS

Model #	Attachment Description	Dimensions (W* x L x H)	Weight (Lbs)
22420	Bore Drive Head Attachment (Bore diameter 1.25"-3.5")	24" x 22" x 25"	120
22421	Rod and Reamer (Bore diameter 1.25"-4.5")	-	58
22472	Trench Filler	48" x 31" x 22"	410

*Working Width

Model #	Attachment Description	Dimensions (W x L x H)	Weight (Lbs)
22473	High-Torque Trencher Head	35" x 65" x 24"	390
22474	High-Speed Trencher Head	35" x 65" x 24"	390
22911	Vibratory Plow	29" x 35" x 24"	400

HIGH-SPEED TRENCHER
Ideal for fast, efficient trenching in most soil conditions. 24", 36" and 48"* booms available. Chain speed: 187 rpm at 11 gpm. Torque: 442 ft/lbs at 3000 psi
*Longer, optional spoils auger recommended for 4' boom

HIGH-TORQUE TRENCHER HEAD
Guarantees performance in difficult soil conditions. 24", 36" and 48"* booms available. Chain speed: 120 rpm at 11 gpm. Torque: 675 ft/lbs at 3000 psi
*Optional spoils auger recommended for 4' boom

TORO® DINGO® COMPACT UTILITY LOADER ACCESSORIES

AUGERING, EARTH MOVING, TILLING AND TRENCHING TO LEVELING, LIFTING, HAULING AND DEMOLISHING...THE OPTIONS ARE ENDLESS

With the wide array of attachments available — more than 35 — the Dingo compact utility loader can perform big-machine applications like grading soil or carrying large amounts of material.

AUGERS AND TREE CARE SPECIFICATIONS

Model #	Attachment Description	Dimensions (W x L x H)	Weight (Lbs)
22429	Stump Grinder (w/chip guard)	44" x 20" x 31"	265
22438	Tree Fork (max load 220 lbs)	24.5" x 45" x 12.5"	169
22341	Adjustable Fork	31" x 45" x 27"	162
22521	Grapple Rake	35.5" x 18" x 30"	265
22805	High-Torque Auger Power Head	24" x 16" x 23"	182
22806	Universal Swivel Auger Power Head	24" x 17" x 23"	196

AUGER BITS AND EXTENSIONS

Model #	Attachment Description
22814	18" Auger Bit
22815	24" Auger Bit
22816	30" Auger Bit
22818	12" Auger Bit Extension
22819	24" Auger Bit Extension
22820	6" Full Flight Auger Bit
22821	9" Full Flight Auger Bit

Model #	Attachment Description
22822	12" Full Flight Auger Bit
22823	15" Full Flight Auger Bit

AUGERS AND TREE CARE EQUIPMENT

STUMP GRINDER
Rugged design and incredible hydraulic power, the Toro stump grinder will make powder of the toughest stumps. Grinds down as far as 16.5" below grade. Grinds up to 36" above grade. 17" wheel diameter.

HIGH-TORQUE AUGER POWER HEAD
Designed specifically to power up to 30" diameter augers in the toughest soil conditions. Auger bits from 6" to 30".

UNIVERSAL SWIVEL AUGER POWER HEAD
Ensures "plumb" holes on uneven terrain up to 18". Perfect for installing fences.

GRAPPLE RAKE
Grab, drag, lift and place brush and debris easily with up to 3,000 lbs (1,361 kg) of clamping force at the tine tips.

TREE FORK
Hydraulic fork arm opens to handle large trees and shrubs. Angle design allows for gentle handling.

ADJUSTABLE FORKS
Easily adjust forks to desired width. Carry fence posts, rocks, pallets, plants, fertilizer, irrigation supplies and more. Forks constructed of high-strength steel. Lift capacity up to 600* lbs.; Maximum lift height: 61".
**Dependent upon Dingo model used.*

MAKES MOVING MATERIALS EASY

EARTH MOVING AND DIGGING EQUIPMENT

LEVELER
Grade, finish, and spread topsoil and other landscape materials. Back fill trenches. Carry job site materials such as plants, fertilizer, irrigation supplies, and more.

SOIL CULTIVATOR
Bury stones, soil clods, debris and grass. Prepares seed bed in one pass, tilling soil up to 5.5" deep. Adjustable grading bar and comb teeth leave perfect germination environment.

TILLER
Hardened steel tines for any soil condition, including clay or hardpan. Till more than six inches deep and 40" wide on one pass. Reversible tine direction frees jams quickly.

TORO® DINGO® COMPACT UTILITY LOADER ACCESSORIES

MANY ATTACHMENTS WITH ONE GOAL: PRODUCTIVITY

A wide variety of attachments, including buckets, augers, trenchers and forks, make the Dingo a more cost effective choice than a dedicated piece of equipment. In short, get more work done in less time.

BUCKET SPECIFICATIONS

Model #	Attachment Description	Dimensions (W x L x H)	Weight (Lbs)	Capacity (cu. ft.)
22409	4 cu.ft.n Standard Bucket	42" x 50" x 42.3"	115	4
22410	Loose Materials Bucket	48" x 26" x 18"	175	6.4
22520	Narrow Bucket	34.5" x 26.7" x 25.1"	153	3.5
22340	TX 1000 Standard Bucket	41" x 23" x 15"	172	4.3
22342	TX 1000 High Volume Bucket	53.25" x 29" x 17"	253	9.0

EARTH MOVING EQUIPMENT SPECIFICATIONS

Model #	Attachment Description	Dimensions (W x L x H)	Weight (Lbs)
22426	Direct Drive Power Box Rake	48" x - x 20.9"	365
22445	40" Tiller	44/40" Tilling Width x 20" x 26"	363
23102	Soil Cultivator	51" x 51" x 21"	363

Model #	Attachment Description	Dimensions (W x L x H)	Weight (Lbs)
23163	Backhoe	34.5" x 41" x 71"	762
23161	Wheeled Backhoe Fit-up Kit*	-	21
23162	TX Backhoe Fit-up Kit**	-	81
23165	Leveler	31.3" x 41.2" x 27"	162

*Backhoe fit-up kit for models 22317 & 22318
*Backhoe fit-up kit for models 22321, 22322, 22323 & 22324

POWER BOX RAKE
Perfect tool for seed or sod bed preparation. Carbide-teeth rotary drum pulverizes rough soil, cuts high spots and fills low spots in one pass. Manually adjustable yoke allows 20° offset. Overall width: 67"; Working width: 48".

BUCKETS
Perfect for light-duty grading, leveling, and material handling. Buckets vary in capacity from 4.3 cu. ft. to 9 cu. ft. for lighter materials.

BACKHOE
Versatile — dig foundations, plant trees, trench and much more. Folds to 34.5" wide for access to tight spaces and ease of transport. 180° bucket and swing arm rotation, 82"digging depth, and standard 13" bucket.

TORO® DINGO® COMPACT UTILITY LOADER ACCESSORIES

TACKLE A LOT MORE WORK IN LESS TIME.

Uses for the Toro Dingo and its various attachments are limited only by your imagination.

MATERIAL HANDLING SPECIFICATIONS

Model #	Attachment Description	Dimensions (W x L x H)	Weight (Lbs)
22423	Multi-Purpose Tool	24" x 4" x10"	40
-	Boom Jib	0.63" x 32.4 x 9.4"	23.2
-	Scarifier Teeth	2" x 13" x 11.7"	9
22442	Cement Bowl		75
22456	Snowthrower	48" x 43.3" x 50.4"	335
23135	Concrete Breaker	25" x 50" x 13" 17" length x 2" diameter	262
22414	Utility Blade	48" x 25" x 21"	212

MISCELLANEOUS SPECIFICATIONS

Model #	Attachment Description	Weight (Lbs)
22475	TX Platform (Gas)	95
22476	TX Platform (Diesel)	95
22464	Trencher Crumber Kit	52
22417	Counter Weight	183

MATERIAL HANDLING EQUIPMENT

CEMENT BOWL
Flighting mixes and holds cement in bowl. Mix, haul, and pour up to 200 lbs. Auger power head required (sold separately).

MANUAL OR HYDRAULIC FORKS
Transport and position trees and large shrubs exactly where you want them with exceptional maneuverability.

HYDRAULIC CONCRETE BREAKER
The hydraulic breaker is the perfect tool for precision demolition. Combined with the compact size and ease of use of the Dingo, the breaker simplifies the difficult job of breaking concrete, asphalt, rock or brick during renovation jobs.

SNOWTHROWER
Two-stage design with the power to handle the toughest snow conditions. Replaceable scraper. Adjustable skids. Overall Width: 48"
Clearing width 44".

MULTI-PURPOSE TOOL
Plant and haul trees or dig and breakup soil with the 3-in-1 ripper, towbar and boom.

UTILITY BLADE
Backfill trenches, move or smooth dirt or even use to clear snow.

MEET THE FAMILY

DINGO TX 1000 SPECIFICATIONS

		DINGO TX 1000 NARROW TRACK 22327	DINGO TX 1000 WIDE TRACK 22328
DIMENSIONS	A Wheelbase	41" (10 cm)	
	B Ground Clearance	6.0" (15 cm)	
	Overall Width	33.7" (86 cm	41" (104 cm)
	C Overall Length	100.7" (256 cm) w/bucket; 81.7" (208 cm) w/o bucket	
	D Overall Height	53.2" (135 cm)	
	E Max Operating Height	105" (267 cm)	
	F Hinge Pin Height	81" (206 cm	
	G Dump Height	61" (155 cm)	
	H Dump Angle	40-degrees	
	I Reach - Fully Raised	24.5" (62 cm)	
	Ground Speed (F/R)	4.7 mph (7.6 km/h)/ /4.7 mph (7.6 km/h)	
	Weight	2,610 lbs (1184 kg)	2,790 lbs (1266 kg)
	Tip Capacity	2,857 lbs (1,296 kg)	3,071 lbs (1,393 kg)
	Rated Operating Capacity (35% of Tip Capacity)*	1,000 lbs (454 kg)	1,075 lbs (488 kg)
ENGINE	Engine	Kubota® D1305	
	Manufacturer's Gross HP Rating at RPM**	24.9 HP (18.6 kW) @ 2600 rpm	
	Displacement	77 cu. in. (1262cc)	
	Fuel Type	Diesel	
	Air Filter	Two-stage, heavy-duty, remote	
	Cooling System	Liquid Cooled	
	Fuel Tank	11.5 gallons (44 liters)	
	Oil Capacity	6.0 quarts (5.7 liters)	
	Loader Arms	Vertical	
OPERATION	Hydraulic Pressure	3,000 PSI	
	Hydraulic Flow	Traction: 13.3 gpm (each pump); Auxiliary: 15.2 gpm	
	Reservoir Capacity	10 gallons (57.5 liters)	
TRACKS	Tracks	Sprocket-drive, 6 road wheels per side	
	Traction	Dual hydrostatic pump	
	Track Length x Width	127.6" x 5.9" (324 cm x 15 cm)	127.6" x 9.5" (324 cm x 24 cm)
	Ground Pressure	5.4 PSI	3.6 PSI

* Per ISO 14397-1
** Per SAE 1995

DINGO TX 427 & TX 525 SPECIFICATIONS

	TX 525 22323	TX 525 WIDE 22324	TX 427 22321	TX 427 WIDE 22322
A Wheelbase	31.2" (79 cm)		31.2" (79 cm)	
B Ground Clearance	4.6" (11.7 cm)		4.6" (11.7 cm)	
Overall Width	33.7" (85.6 cm)	41" (104 cm)	33.7" (85.6 cm)	41" (104 cm)
C Overall Length	92" (233.7 cm) w/bucket; 70.7" (180 cm) w/o bucket		92" (233.7 cm) w/bucket; 70.7" (180 cm) w/o bucket	
D Overall Height	46.1" (117.1 cm)		46.1" (117.1 cm)	
E Max Operating Height	90.1" (229 cm)		90.1" (229 cm)	
F Hinge Pin Height	65.8" (167.1 cm)		65.8" (167.1 cm)	
G Dump Height	46.1" (117.1 cm)		46.1" (117.1 cm)	
H Dump Angle	38-degrees		38-degrees	
I Reach - Fully Raised	21.8" (55.4 cm)		21.8" (55.4 cm)	
Ground Speed (F/R)	0-4.5 mph (0-7.2 km/h) / 0-2.0 mph (0-3.2 km/h)		0-4.5 mph (0-7.2 km/h) / 0-2.0 mph (0-3.2 km/h)	
Weight	1,904 lbs (864 kg)	2,013 lbs (907 kg)	1,882 lbs (854 kg)	1,990 lbs (902 kg)
Tip Capacity	1,580 lbs. (717 kg)		1,530 lbs. (694 kg)	
Rated Operating Capacity (35% of Tip Capacity)*	553 lbs. (251 kg)		535 lbs. (243 kg)	
Engine	Kubota D902		Kohler Command Pro Series CH 740	
Manufacturer's Gross HP Rating at RPM**	23.3 HP (17.3 kW) @ 3400 rpm		25 HP (20.1 kW) @ 3600 rpm	
Displacement	55 cu. in. (901cc)		44 cu. in. (725cc)	
Fuel Type	Diesel		Gas	
Air Filter	Two-stage, heavy-duty, remote		Two-stage, heavy-duty, remote	
Cooling System	Liquid Cooled		Air Cooled	
Fuel Tank	6.0 gallons (23 liters)		6.0 gallons (23 liters)	
Oil Capacity	3.84 quarts (3.63 liters) 2.0 quarts (2.95 liters)		2.0 quarts (2.95 liters)	
Loader Arms	Radial		Radial	
Hydraulic Pressure	3,000 PSI		3,000 PSI	
Hydraulic Flow	Traction: 16.9 gpm (each pump); Auxiliary: 13.8 gpm		Traction: 16.9 gpm (each pump); Auxiliary: 11.4 gpm	
Reservoir Capacity	10.5 gallons (40 liters)		10.5 gallons (40 liters)	
Tracks	Sprocket-drive, 10 road wheels per side		Sprocket-drive, 10 road wheels per side	
Traction	Dual hydrostatic pump		Dual hydrostatic pump	
Track Length	96.6" x 5.9" (245 cm x 15 cm)	96.6" x 9.5" (245 cm x 24 cm)	96.6" x 5.9" (245 cm x 15 cm)	96.6" x 9.5" (245 cm x 24 cm)
Ground Pressure	5.0 PSI	3.5 PSI	5.0 PSI	3.5 PSI

* Per ISO 14397-1
** Per SAE 1995

DINGO 220, 323 & 320-D SPECIFICATIONS

	DINGO 220 22317	DINGO 323 22318	DINGO 320-D 22337CP
A Wheelbase	28" (71 cm)		
B Ground Clearance	5.8" (15 cm) front & rear		
Overall Width	40.5" (103 cm) standard tires; 35" (90 cm) narrow tires		
C Overall Length	82.2" (208.8 cm) w/bucket; 62" (157.5 cm) w/o bucket		
D Overall Height	48.7" (123.7 cm)		
E Max Operating Height	91.2" (231.6 cm)		
F Hinge Pin Height	66" (167.6 cm)		
G Dump Height	47" (119 cm)		
H Dump Angle	34-degrees		
I Reach – Fully Raised	28" (71.1 cm)		
Ground Speed (F/R)	0-3.7 mph (0-6 km/h) / 0-3.7 mph (0-6 km/h)		0-3.0 mph (0-4.8 km/h) / 0-3.0 mph (0-4.8 km/h)
Weight	1,430 lbs (649 kg)	1,567 lbs (711 kg)	1,722 lbs (781 kg)
Tip Capacity	1,030 lbs (467 kg)		1,048 lbs (146 kg)
Rated Operating Capacity (50% of Tip Capacity)*	515 lbs. (234 kg)		524 lbs. (238 kg)
Engine	Kohler® Command Series CH20	Kohler® Command Series CH23	Kubota D722
Manufacturer's Gross HP Rating at RPM*	20 HP (14.9 kW) @ 3600 rpm	23 HP (17.2 kW) @ 3600 rpm	20 HP (14.9 kW) @ 3600 rpm
Displacement	38.1 cu. in. (624 cc)	41 cu. in. (674cc)	43.88 cu. in. (719 cc)
Fuel Type	Gas		Diesel
Air Filter	High-capacity, paper type w/pre-cleaner	Two-stage, heavy-duty, remote	
Cooling System	Air Cooled		Liquid Cooled
Fuel Tank	5.6 gallon (21 liter)	11.2 gallon (42.4 liter)	4 gallon (15 liter)
Oil Capacity	2 quarts (1.9 liter)		3.4 quarts (3.2 liter)
Loader Arms	Radial		
Hydraulic Pressure	3,250 PSI		
Hydraulic Flow	10.8 gpm high-flow hydraulic circuit, 4 gpm low-flow hydraulic circuit		
Reservoir Capacity	14.8 gallons (56 liter)	17 gallons (64 liter)	14.8 gallons (56 liter)

* Per ISO 14397-1
** Per SAE 1995

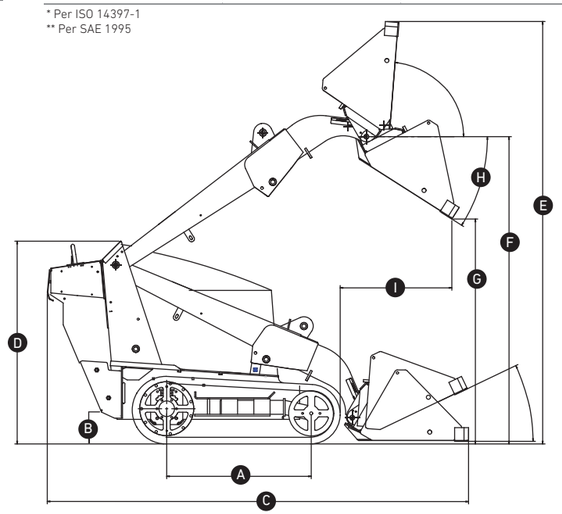

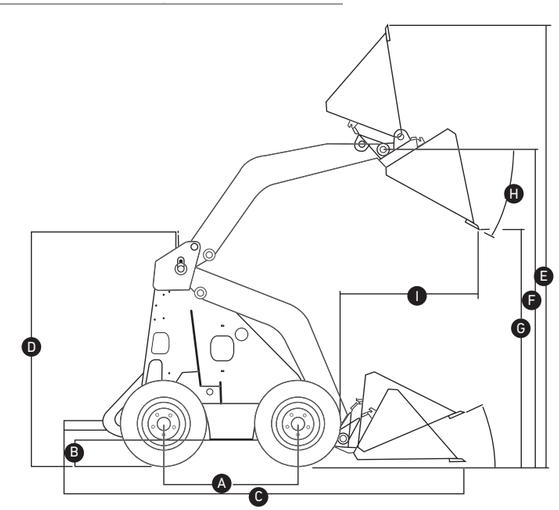

DIMENSIONS

- A Wheelbase
- B Ground Clearance
- C Overall Length
- D Overall Height
- E Maximum Operating Height
- F Hinge Pin Height
- G Dump Height
- H Dump Angle
- I Reach

TORO DINGO SPECIFICATIONS

WHEN WE SAY **COUNT ON IT**, WE MEAN IT

Every product that carries the Toro brand is backed by over 100 years of history, innovation and timeless dependability. We never stop investing in research and development to give our customers the latest features. That's why Toro is one of the best-known, most trusted brands in the business. We also stand behind our products with a nationwide network of knowledgeable dealers for parts and service support. **Real People. Real Support.**

THERE IS NO SUBSTITUTE FOR TORO GENUINE PARTS

With Toro, quality and service don't end when you take delivery of your equipment. Genuine Toro parts are designed specifically for your machine to ensure it performs as intended. For peace of mind, insist on Toro genuine parts.

TORO. **Count on it.**

youtube.com/toro

facebook.com/toro.company

twitter.com/TheToroCompany

toro.com / toro.ca

490-9226
©2016 The Toro Company, Bloomington, MN 55420
All rights reserved. Printed in the USA.

Products depicted in this literature are for demonstration purposes only. Actual products offered for sale may vary in use, design, required attachments and safety features. We reserve the right to improve our products and make changes in specifications, design an d standard equipment without notice and without incurring obligation. See your dealer for details on all our warranties.